General Description

The MAX86160 evaluation kit (MAX86160EVSYS#) provides a proven design to evaluate the MAX86160 integrated heart-rate monitor sensor module. The EV kit consist of two boards. IFC6410 is the main board and MAX86160 Breakout EV kit is the daughter board that includes the MAX86160. The EV kit is powered using an external 5V/3A power supply to the IFC6410, and +1.8V through an LDO for the sensor and +5.0V for the internal LEDs of the MAX86160.

The EV kit comes with a MAX86160EFN+ installed in an 18-pin OLGA package.

Features

- Real-Time Monitoring
- Data-Logging Capabilities
- Fully Assembled and Tested
- Windows® 7, and Windows 8/8.1-Compatible Software

***Ordering Information* appears at end of data sheet.**

Windows is a registered trademark and registered service mark of Microsoft Corporation.

Quick Start

- MAX86160 EV Kit (MAX86160 Breakout EV kit, IFC6410, 5V/3A power adapter and micro-USB cable included)
- Windows PC

Procedure

The EV kit is fully assembled and tested. Follow the steps below to verify board operation:

1) Visit **www.maximintegrated.com/evkit-software** to download the most recent version of the EV kit software, *SetupPPG_EvKit_max86160_x.x.zip*. Save the EV kit software to a temporary folder and uncompress the ZIP file.
2) Open *SetupPPG_EvKit_max86160_x.x.msi* and follow the instructions from the pop-up windows as shown in Figure 1, Figure 2, and Figure 3.
3) Connect the MAX86160 Breakout EV Kit (J4 and J5) to IFC6410 main board (P1 and P3), as shown in Figure 4.
4) Power up the boards by connecting the 5V/3A power supply adapter to the IFC6410 (J4) and wall socket.
5) Connect the micro-USB cable from the PC to the EV kit board through J3.
6) Install the ADB drivers for IFC6410. Drivers can be found in the installed folder of Maxim SensorStudio, ..\Maxim Integrated\SensorStudio5\USB_drivers
7) Open SensorStudio5 and verify that the EV kit is connected by observing the status bar at the lower-left corner of the GUI, as shown in Figure 5. If “Disconnected” is shown, please double-check the board’s power supply, USB connection, and press “Refresh” to try.
8) From the top menu, choose **View** and then click on “*PPG_EvKit*”. The MAX86160 PPG evaluation page will then appear, as shown in Figure 6.
9) Pressing the **Start Monitoring** button with the AGC box checked will start the PPG evaluation. LED current will automatically be adjusted by the driver.
10) Place the test subject on top of the MAX86160 (U1) of the MAX86160 Breakout EV Kit and observe the PPG graphs. See Figure 7.

maxim integrated™

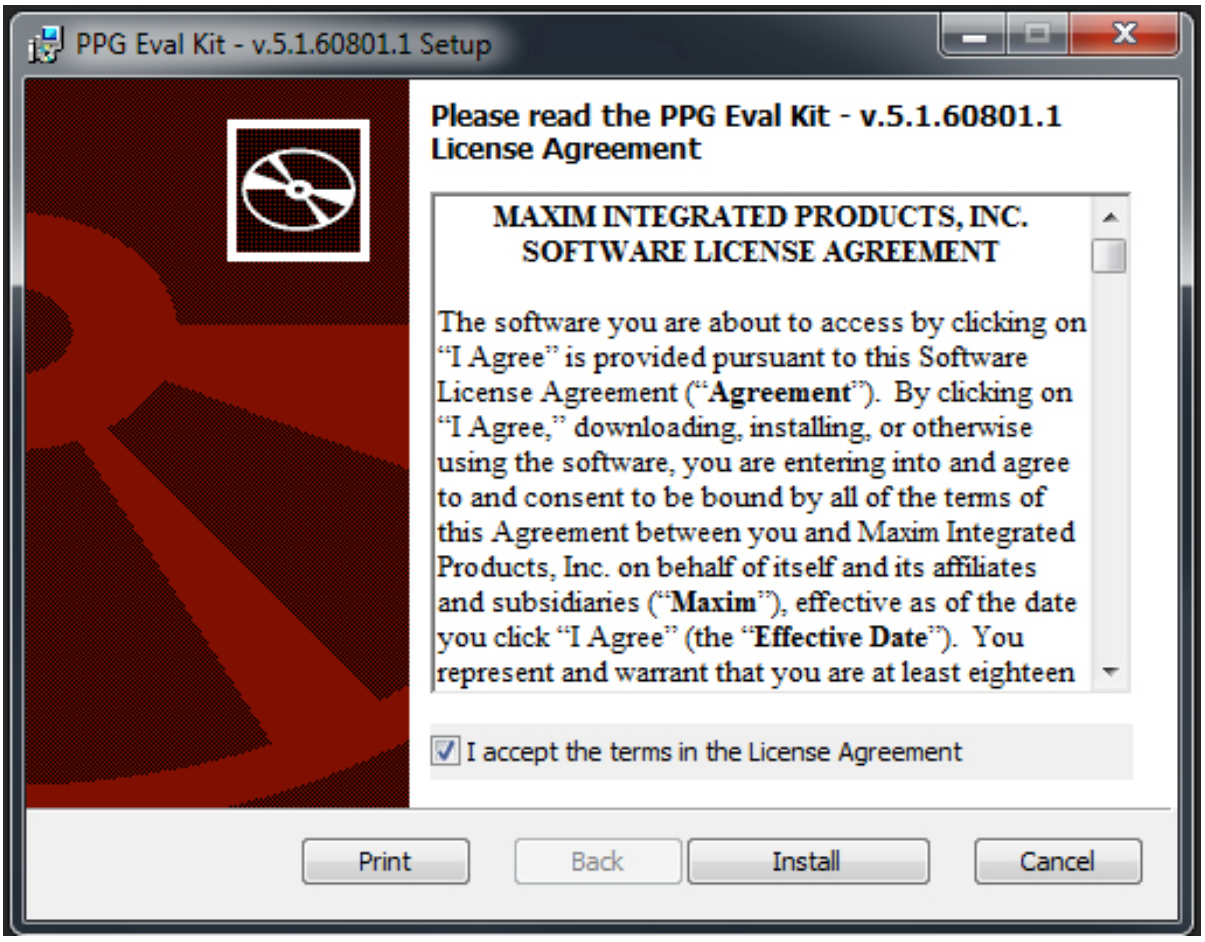

Figure 1. Setup SensorStudio Software – Step 1

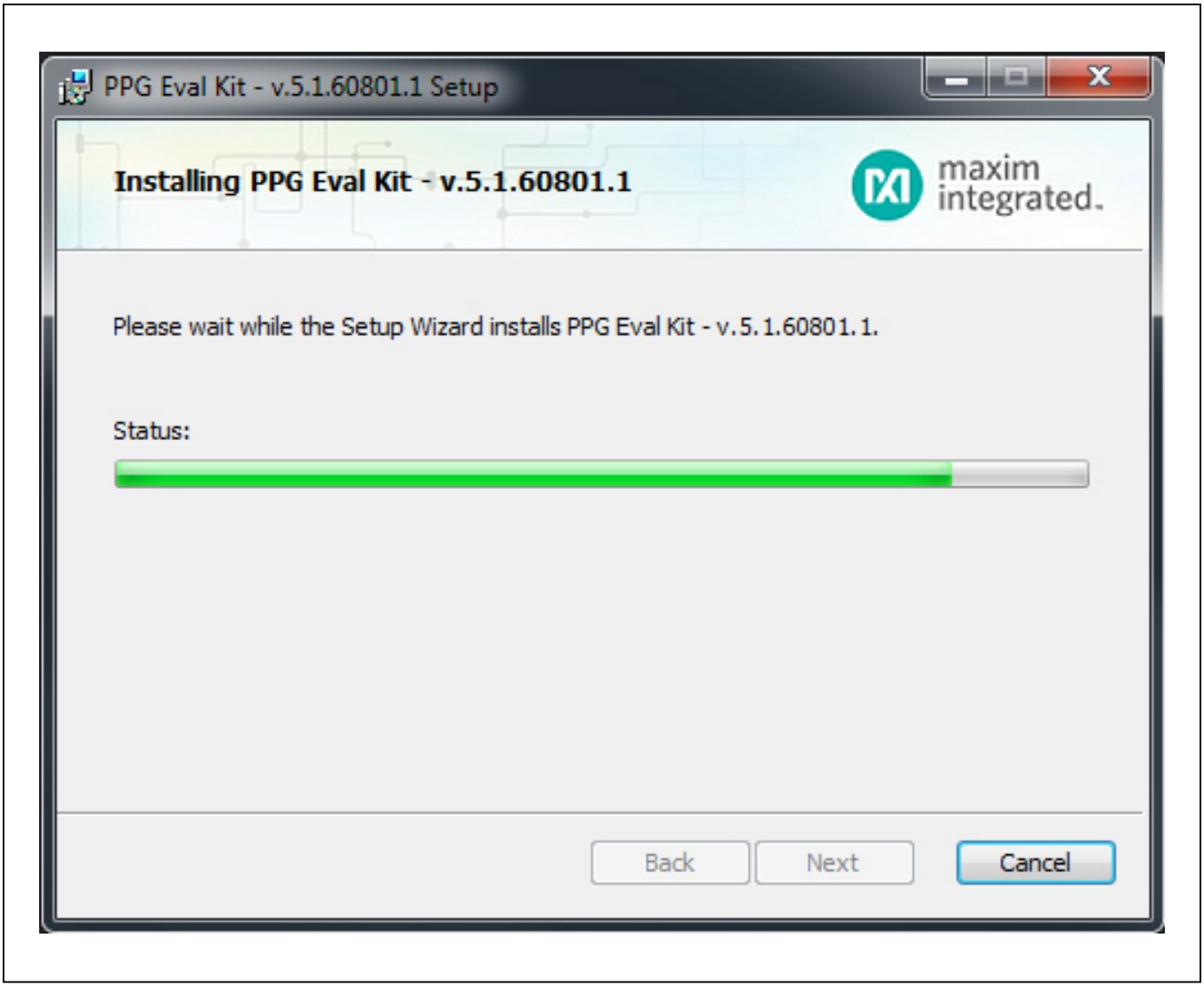

Figure 2. Setup SensorStudio Software – Step 2

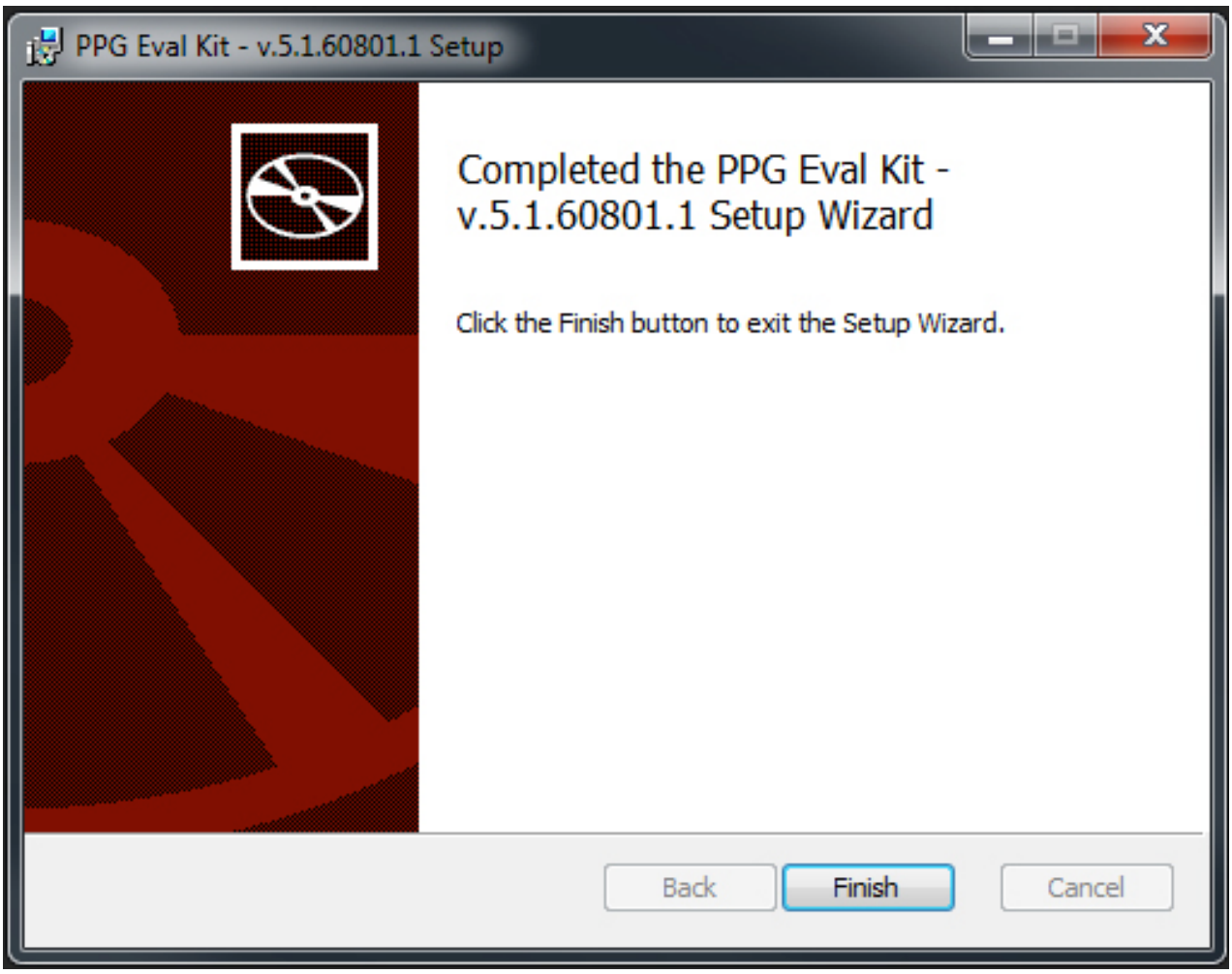

Figure 3. Setup SensorStudio Software – Step 3

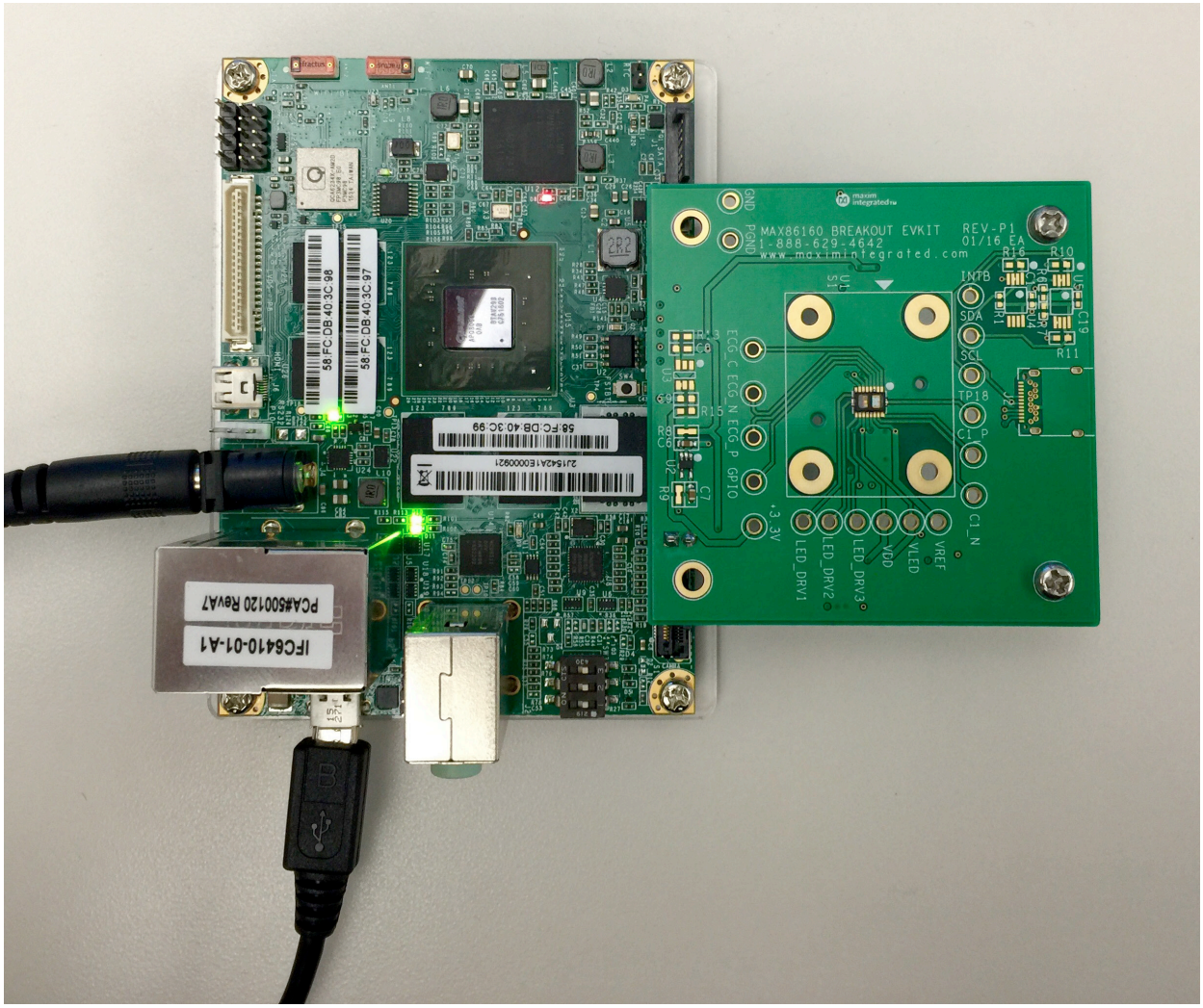

Figure 4. Hardware Setup

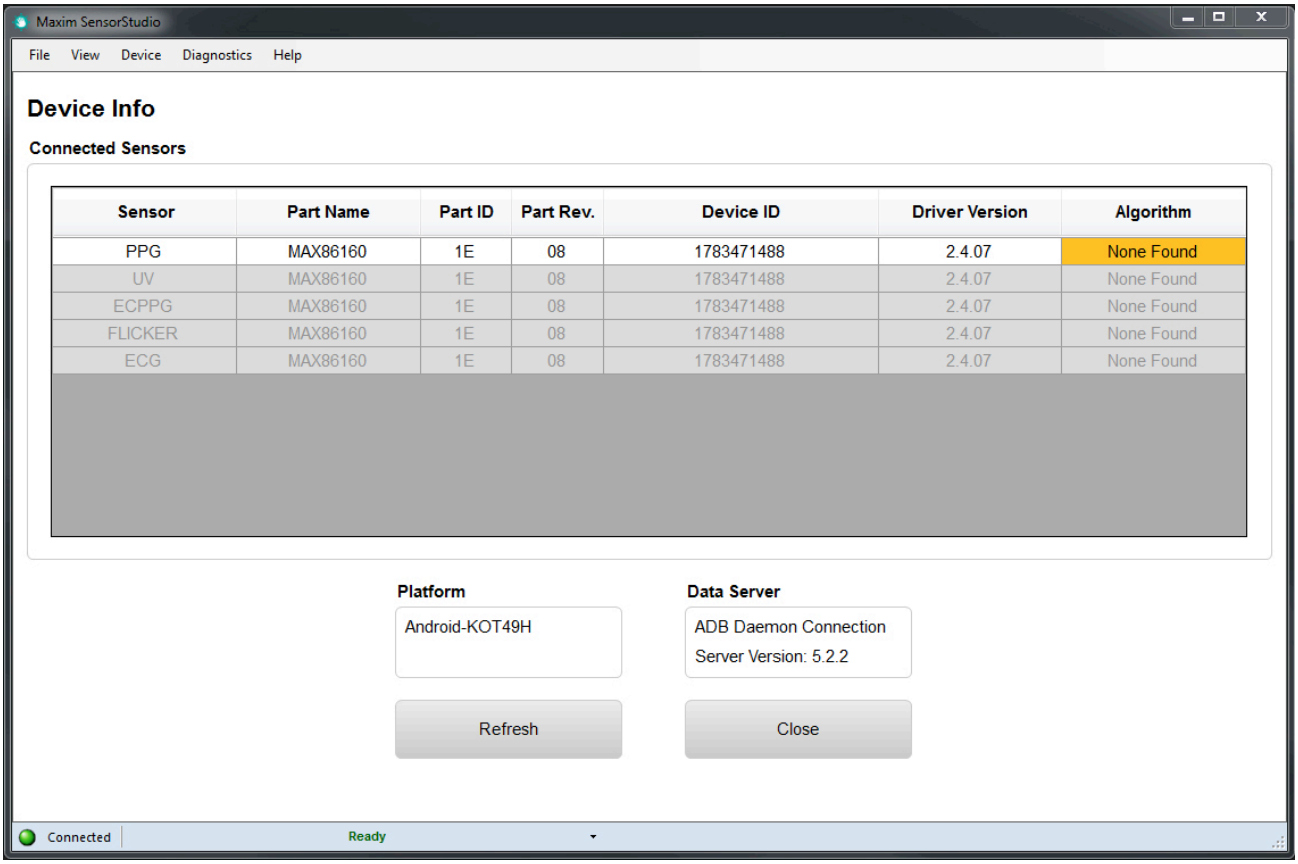

Figure 5. Maxim SensorStudio GUI

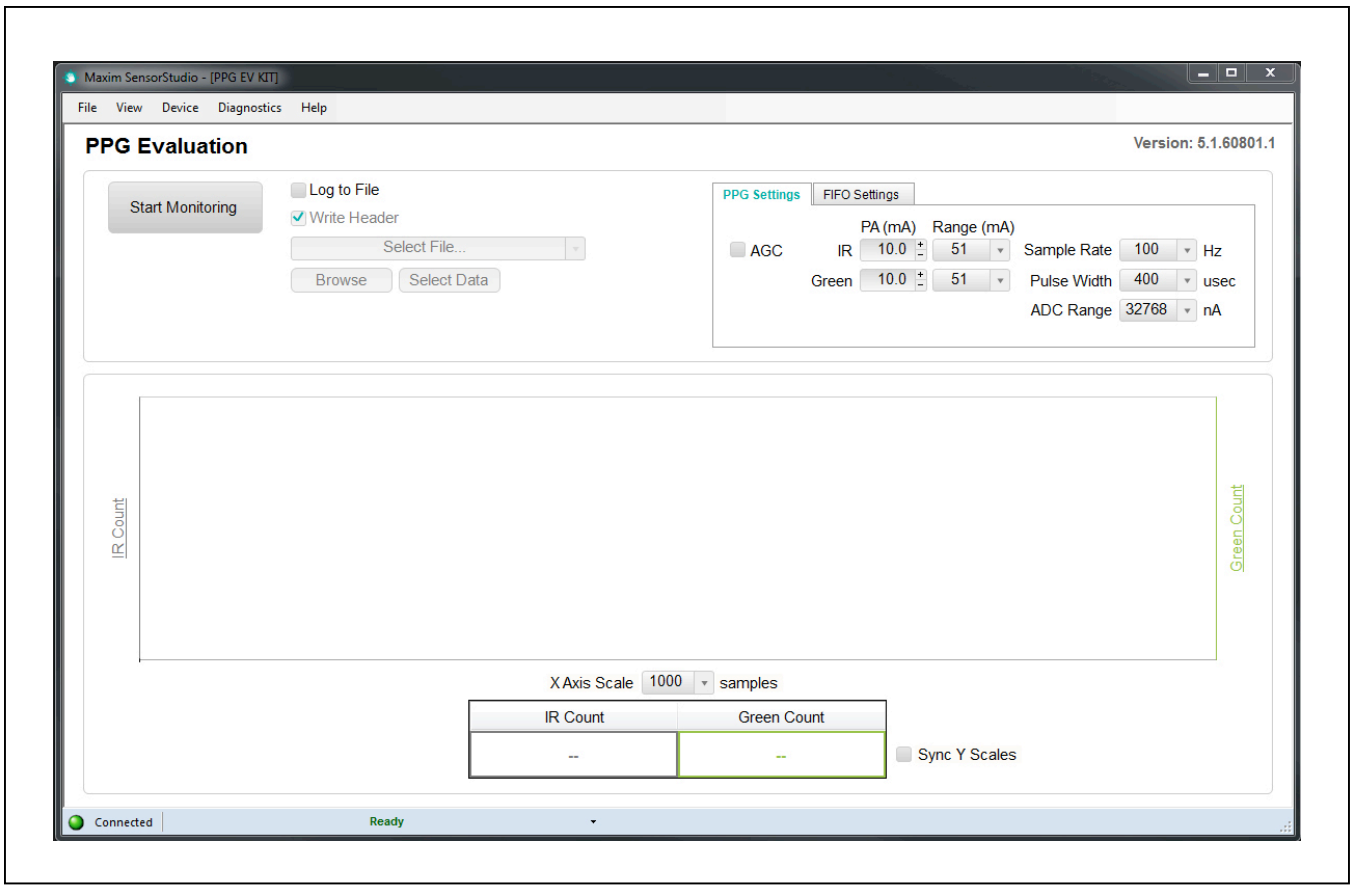

Figure 6. Maxim SensorStudio GUI – PPG Evaluation Page

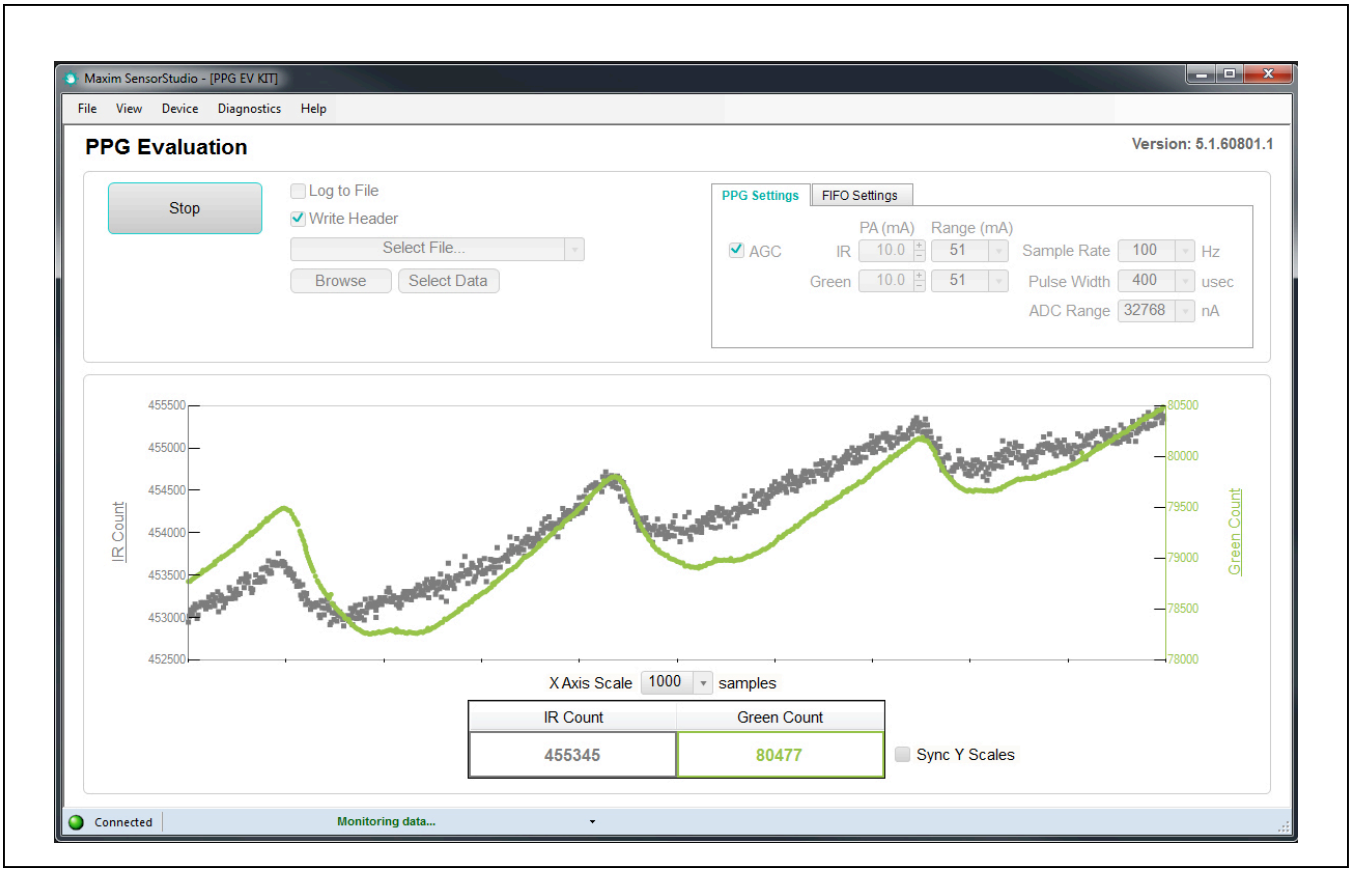

Figure 7. Maxim SensorStudio GUI – PPG Evaluation Page: Monitoring Data

Detailed Description of Software

The main window of the SensorStudio displays the PPG waveforms (ADC counts over time), Sample Rate settings, pulse width settings and LED currents settings. By default, the AGC (auto-gain control) is enabled, in this mode, the LED currents will be dynamically controlled by the software driver to achieve optimal signal. Under this mode, the sample rate is set to 400hz. In order to manually control the settings menu inside the PPG Settings Tab (sample rate, pulse width and LEDs current), AGC must be unchecked.

Data Logging

The software also provides capability of Data logging. First of all, check the “Log to File” option, and entered the file name by pressing “Browse” (by default under folder \MaximLogs\.). The log file will start saving data once “Start Monitoring” is pressed.

PPG Settings

Within the PPG Settings tab, both the drive current of IR and Green LED can be adjusted individually. Each LED driver is consisted of four different ranges which can be chosen from IR LED Range/Green LED Range

- 0 – ***51***mA (0.2mA/LSB)
- 0 – ***102***mA (0.4mA/LSB)
- 0 – ***153***mA (0.6mA/LSB)
- 0 – ***204***mA (0.8mA/LSB)

After the range is chosen, the LED current can be adjusted from the IR and Green LED current, respectively.

In addition to the LED Currents, the PPG Settings Tab also consists of controls to the sample rate and pulse width. For more information about the parameters, please refer to the sensor data sheet.

The **Sample Rate** drop-down list is adjustable from 10Hz to 3200Hz.

The **Pulse Width** drop-down list is adjustable from 50Hz to 400µsec.

The **ADC Range** drop-down list is adjustable from 4096 to 32768nA.

FIFO Settings

FIFO Almost Full indicate how many new samples can be written to the FIFO before the interrupt is asserted. For example, if it is set to 15, the interrupt triggers when there is 17 empty space left (15 data samples), and so on.

By Checking “**FIFO Rolls on Full**” options, the FIFO will automatically roll over when it is full. Otherwise, the FIFO will stops accepting new data until it’s read out.

To reduce the amount of data throughput, adjacent samples (in each individual channel) can be averaged and decimated on the chip by setting the Sample Averaging.

The **Sample Averaging** drop-down list is adjustable from 1 to 32.

RegMapForm

The software also provides capability of viewing and changing the Register Settings of the sensor. This feature can be opened by going to the top menu → View → Register Map, as shown in Figure 8.

The I^2C register can be read back and written to by using the RegMapForm tool (Figure 9). Double-click on the bitfield you would like to change to flip the bit. Then, click Set Reg to update the settings.

By using the manual update feature, one can also read and set the sensor register settings easily.

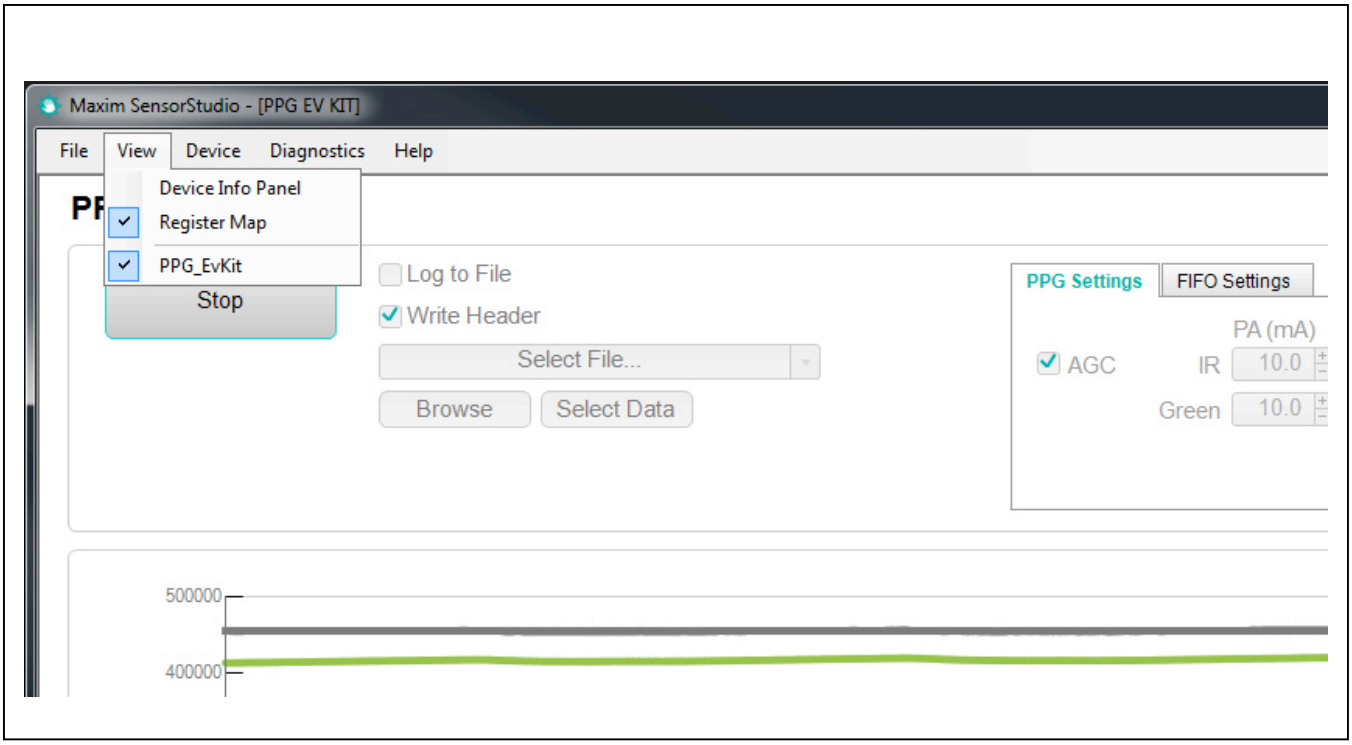

Figure 8. Register Map Options

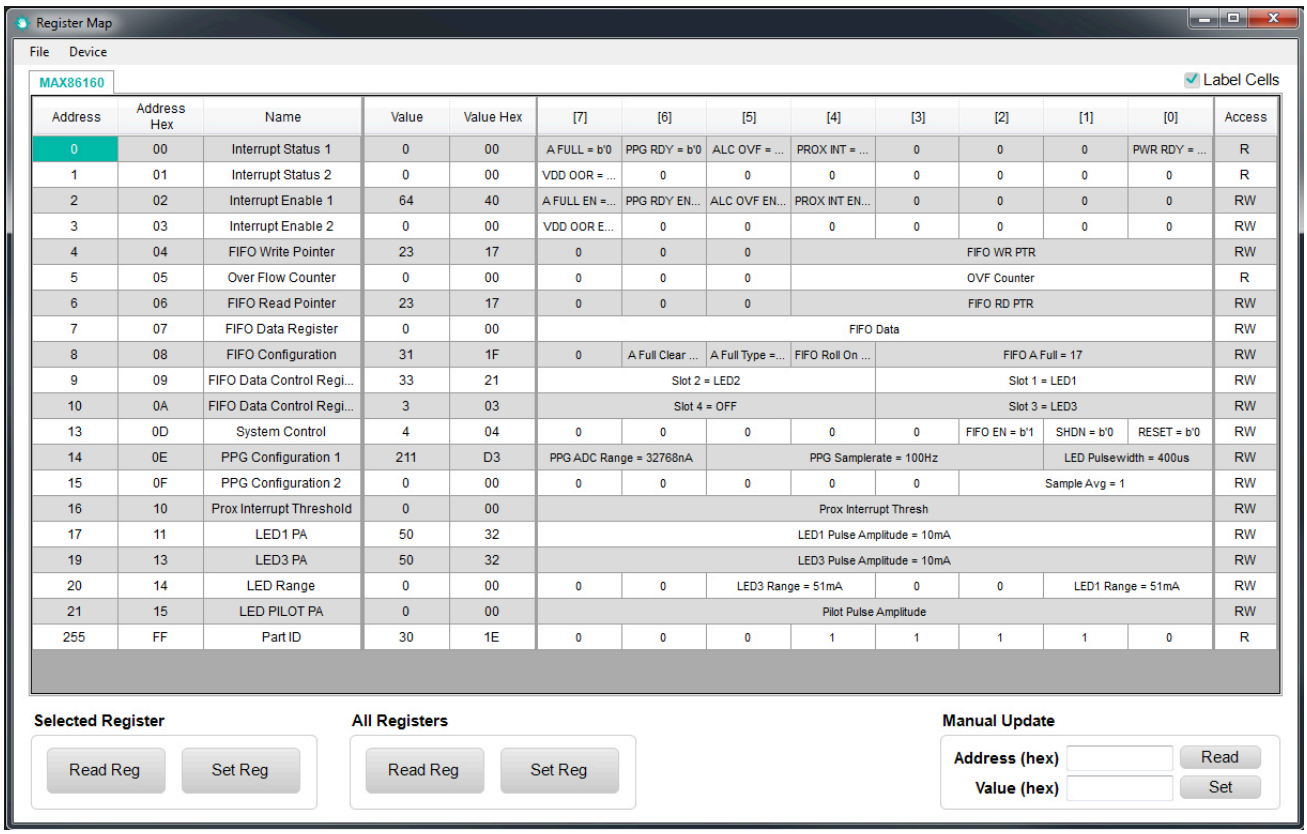

Address	Address Hex	Name	Value	Value Hex	[7]	[6]	[5]	[4]	[3]	[2]	[1]	[0]	Access
0	00	Interrupt Status 1	0	00	A FULL = b'0	PPG RDY = b'0	ALC OVF = ...	PROX INT = ...	0	0	0	PWR RDY = ...	R
1	01	Interrupt Status 2	0	00	VDD OOR = ...	0	0	0	0	0	0	0	R
2	02	Interrupt Enable 1	64	40	A FULL EN =...	PPG RDY EN...	ALC OVF EN...	PROX INT EN...	0	0	0	0	RW
3	03	Interrupt Enable 2	0	00	VDD OOR E...	0	0	0	0	0	0	0	RW
4	04	FIFO Write Pointer	23	17	0	0	0	FIFO WR PTR					RW
5	05	Over Flow Counter	0	00	0	0	0	OVF Counter					R
6	06	FIFO Read Pointer	23	17	0	0	0	FIFO RD PTR					RW
7	07	FIFO Data Register	0	00	FIFO Data								RW
8	08	FIFO Configuration	31	1F	0	A Full Clear ...	A Full Type =...	FIFO Roll On ...	FIFO A Full = 17				RW
9	09	FIFO Data Control Regi...	33	21	Slot 2 = LED2				Slot 1 = LED1				RW
10	0A	FIFO Data Control Regi...	3	03	Slot 4 = OFF				Slot 3 = LED3				RW
13	0D	System Control	4	04	0	0	0	0	0	FIFO EN = b'1	SHDN = b'0	RESET = b'0	RW
14	0E	PPG Configuration 1	211	D3	PPG ADC Range = 32768nA		PPG Samplerate = 100Hz				LED Pulsewidth = 400us		RW
15	0F	PPG Configuration 2	0	00	0	0	0	0	0	Sample Avg = 1			RW
16	10	Prox Interrupt Threshold	0	00	Prox Interrupt Thresh								RW
17	11	LED1 PA	50	32	LED1 Pulse Amplitude = 10mA								RW
19	13	LED3 PA	50	32	LED3 Pulse Amplitude = 10mA								RW
20	14	LED Range	0	00	0	0	LED3 Range = 51mA		0	0	LED1 Range = 51mA		RW
21	15	LED PILOT PA	0	00	Pilot Pulse Amplitude								RW
255	FF	Part ID	30	1E	0	0	0	1	1	1	1	0	R

Figure 9. Register Map User Interface

Detailed Description of Hardware

The MAX86160 EV kit provides a proven design to evaluate the MAX86160 integrated heart-rate monitor sensor module. The EV kit is powered through the +5V/3A from the DC Power Adapter to IFC6410 main board. Then +5V supply from the main board is used for the +VLED supply and regulated +1.8V to V_{DD} supply of the MAX86160. The CPU on the IFC6410 communicates with the MAX86160 through interrupt signal and I^2C interface. There are a lot of different connectors option on the breakout EV kit board, however, only Connector 2 (J4 and J5) will be utilized in this EV kit.

Component List

PART	QTY	DESCRIPTION
Inforce IFC6410	1	EV KIT motherboard
MAX86160EVKIT	1	MAX86160 Breakout EVKIT

Ordering Information

PART	TYPE
MAX86160EVSYS#	EVKIT

#Denotes RoHS compliant.

Component Information, PCB Layout, and Schematic

See the following links for component information, PCB layout diagrams, and schematic.

- **MAX86160 EV BOM**
- **MAX86160 EV PCB**
- **MAX86160 EV Schematic**

Revision History

REVISION NUMBER	REVISION DATE	DESCRIPTION	PAGES CHANGED
0	8/16	Initial release	—

For pricing, delivery, and ordering information, please contact Maxim Direct at 1-888-629-4642, or visit Maxim Integrated's website at www.maximintegrated.com.

Maxim Integrated cannot assume responsibility for use of any circuitry other than circuitry entirely embodied in a Maxim Integrated product. No circuit patent licenses are implied. Maxim Integrated reserves the right to change the circuitry and specifications without notice at any time.

Maxim Integrated and the Maxim Integrated logo are trademarks of Maxim Integrated Products, Inc. © 2016 Maxim Integrated Products, Inc.

TITLE: Bill of Materials
DATE: 01/23/2016
DESIGN: max86160_breakout_evkit_p1

ITEM	QTY	REF DES	MAXINV	MFG PART #	MFCTR	VALUE	DESCRIPTION
3	3	C2, C4, C5	20-000U1-10	C0603C104K8RAC	KEMET	0.1UF	CAPACITOR; SMT (0603); CERAMIC CHIP; 0.1UF; 10V; TOL=10%; MODEL=C0603 SERIES; TG=-55 DEGC TO +125 DEGC; TC=X7R
4	3	C3, C11, C12	20-002U2-10	GRM188R71A225KE15; CL10B225KP8NNN	MURATA; SAMSUNG	2.2UF	CAPACITOR; SMT (0603); CERAMIC CHIP; 2.2UF; 10V; TOL=10%; TG=-55 DEGC TO +125 DEGC; TC=X7R
11	1	J4	01-68031102H2P-19	68031-102HLF	FCI CONNECT	68031-102HLF	CONNECTOR; MALE; THROUGH HOLE; 68031 SERIES; BERGSTIK II HEADER; STRAIGHT; 2PINS
12	1	J5	01-SQW11501LDVS30P-80	SQW-115-01-L-D-VS	SAMTEC	SQW-115-01-L-D-VS	CONNECTOR; FEMALE; SMT; SQW SERIES; STRAIGHT; 30PINS
14	1	R2	80-0001K-24	CRCW06031001FK; ERJ-3EKF1001V	VISHAY DALE; PANASONIC	1K	RESISTOR; 0603; 1K; 1%; 100PPM; 0.10W; THICK FILM
15	1	R14	80-0000R-27	CRCW06030000ZS; MCR03EZPJ000; ERJ-3GEY0R00	VISHAY DALE/ROHM/ PANASONIC	0	RESISTOR; 0603; 0 OHM; 0%; JUMPER; 0.10W; THICK FILM
17	1	U2	MAX8511EXK18+	MAX8511EXK18+	MAXIM	MAX8511EXK18+	IC; VREG; ULTRA-LOW-NOISE; HIGH PSRR; LOW=DROPOUT; LINEAR REGULATOR; SC70-5
20	1		EPCB86160BREAKOUT	MAX86160breakout	MAXIM	PCB	PCB: MAX86160breakout
4	1	S1	N/A	MAX86160	MAXIM	MAX86160	EVKIT PART-IC; MAX86160; OLGA18 2.8MM X 4.3XMM 1.55MM; 0.525MM PITCH; WITH A5753-118-23 ALT SYMBOL SOCKET CONSIDERATION
TOTAL	13						
DO NOT STUFF (DNF)							

1	12	GND, C1_N, C1_P, GPIO, PGND, TP18, +3.3V, ECG_C, ECG_N, ECG_P, LED_DRV2, LED_DRV3	02-TPMINI5005-00	5005	?	5005	TESTPOINT WITH 1.80MM HOLE DIA, RED, COMPACT
2	2	C1, C19	20-000U1-B68	GRM155R71E104KE14	MURATA	0.1UF	CAPACITOR; SMT (0402); CERAMIC CHIP; 0.1UF; 25V; TOL=10%; MODEL=GRM SERIES; TG=-55 DEGC TO +125 DEGC; TC=C0G
5	3	C6-C8	20-0001U-63	C0603C105K4RAC; GRM188R71C105KA12; C1608X7R1C105K; EMK107B7105KA	KEMET/MURATA/TDK/TAIYO YUDEN	1UF	CAPACITOR; SMT (0603); CERAMIC CHIP; 1UF; 16V; TOL=10%; MODEL=; TG=-55 DEGC TO +125 DEGC; TC=X7R
6	1	C9	20-0010U-R1A	CL10B106MQ8NRN	SAMSUNG ELECTRONICS	10UF	CAPACITOR; SMT (0603); CERAMIC CHIP; 10UF; 6.3V; TOL=20%; MODEL=CL SERIES; TG=-55 DEGC TO +125 DEGC; TC=X7R
7	1	C20	20-0010U-16	C1608X5R1A106K	TDK	10UF	CAPACITOR; SMT (0603); CERAMIC CHIP; 10UF; 10V; TOL=10%; MODEL=; TG=-55 DEGC TO +85 DEGC; TC=X5R
8	1	J1	01-SSW11222FDVS24P-17A	SSW-112-22-F-D-VS	SAMTEC	SSW-112-22-F-D-VS	CONNECTOR; FEMALE; SMT; 0.025 POST SOCKET; STRAIGHT; 24PINS
9	1	J2	01-12401548E42A24P-26	12401548E4#2A	AMPHENOL	12401548E4#2A	CONNECTOR; FEMALE; THROUGH HOLE; USB TYPE C CONNECTOR; RIGHT ANGLE HYBRID; 24PINS
10	1	J3	01-FTSH11701LDH34P-19	FTSH-117-01-L-DH	SAMTEC	FTSH-117-01-L-DH	CONNECTOR; MALE; SMT; FTSH SERIES; SMT MICRO HEADER; RIGHT ANGLE; 34PINS
13	3	R1, R6, R7	80-0470R-23	CRCW0402470RFK	VISHAY DALE	470	RESISTOR, 0402, 470 OHM, 1%, 100PPM, 0.0625W, THICK FILM
14	4	R10, R11, R16	80-0001K-24	CRCW06031001FK; ERJ-3EKF1001V	VISHAY DALE; PANASONIC	1K	RESISTOR; 0603; 1K; 1%; 100PPM; 0.10W; THICK FILM
16	1	U1	03-0.525OLGA18-00	A5753-118-23	ARIES ELECTRONICS	A5753-118-23	HT SOCKET; PITCH(0.525MM); NO. OF LEADS-(18); OLGA 4.30MMX2.80MM
18	1	U3	MAX1818EUT33+	MAX1818EUT33+	MAXIM	MAX1818EUT33+	IC; VREG; 500mA LOW-DROPOUT LINEAR REGULATOR IN SOT23

19	2	U4, U5	10-P82B96PW-U	P82B96PW	TEXAS INSTRUMENTS	P82B96PW	IC; BUF; P82B96 I2C COMPATIBLE DUAL BIDIRECTIONAL BUS BUFFER; TSSOP8

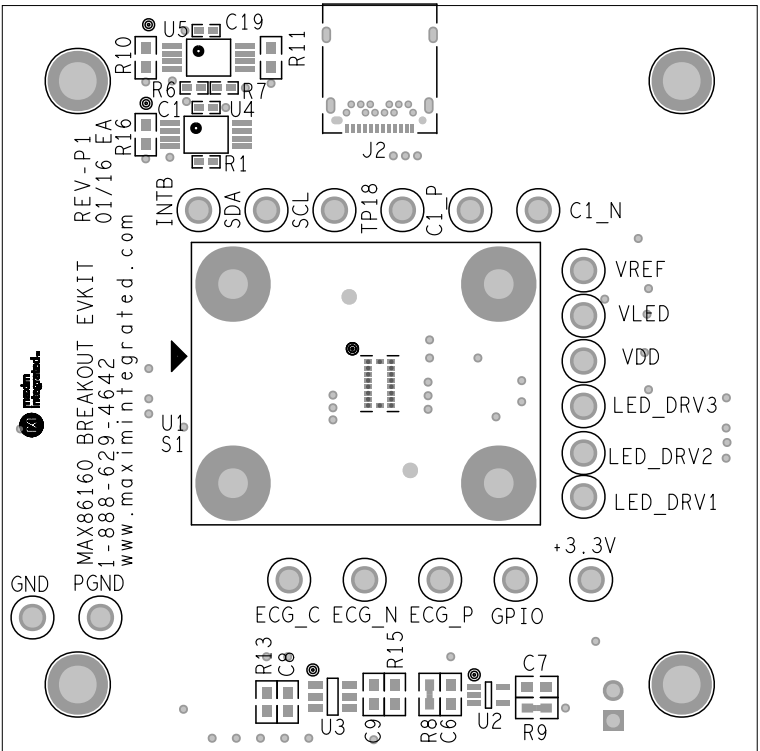



TOP SILKSCREEN

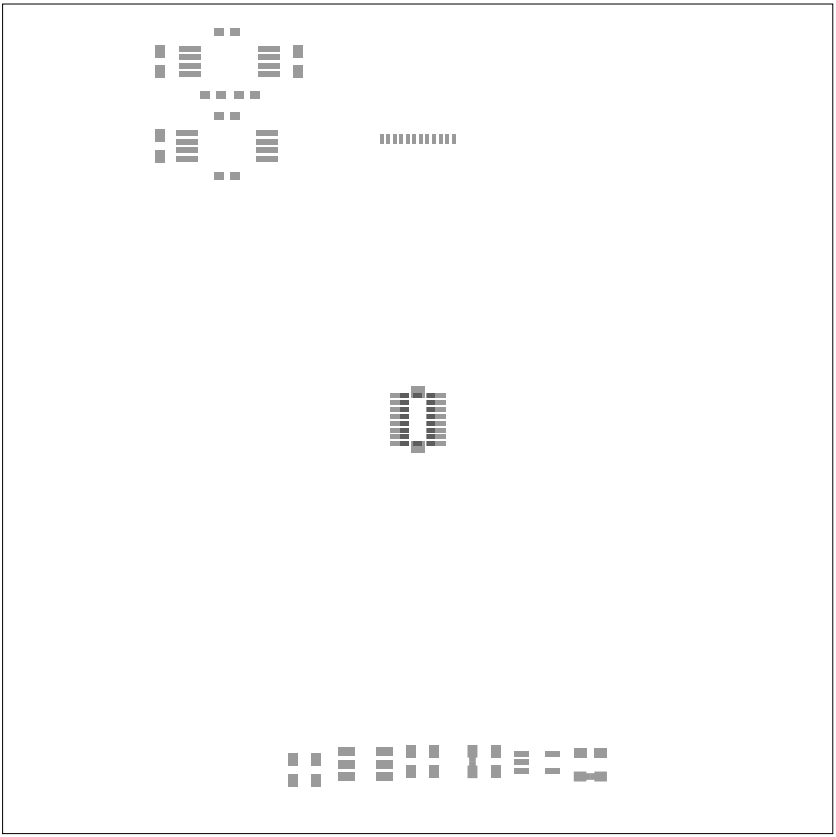

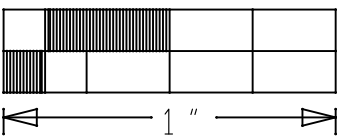

TOP PASTE

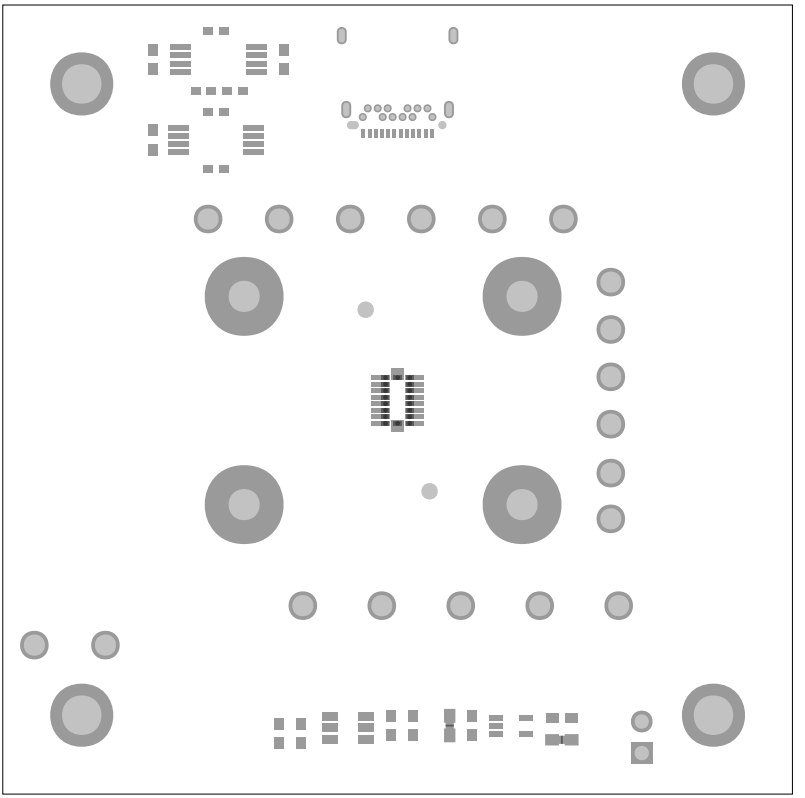

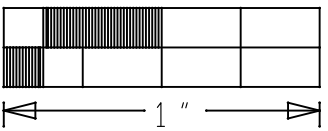

TOP MASK

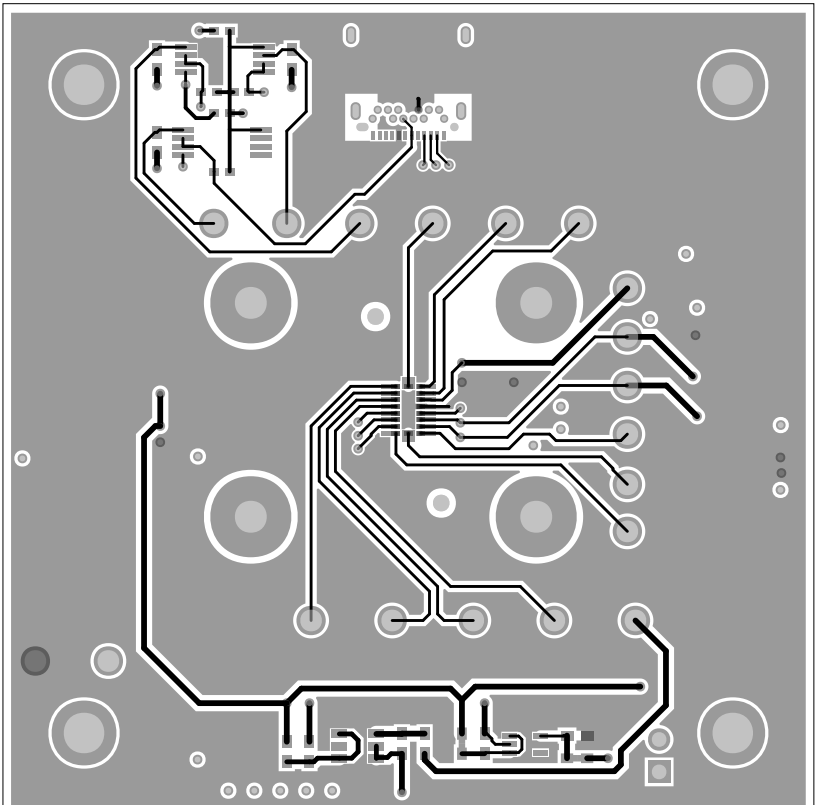

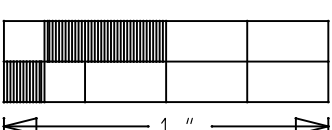

TOP

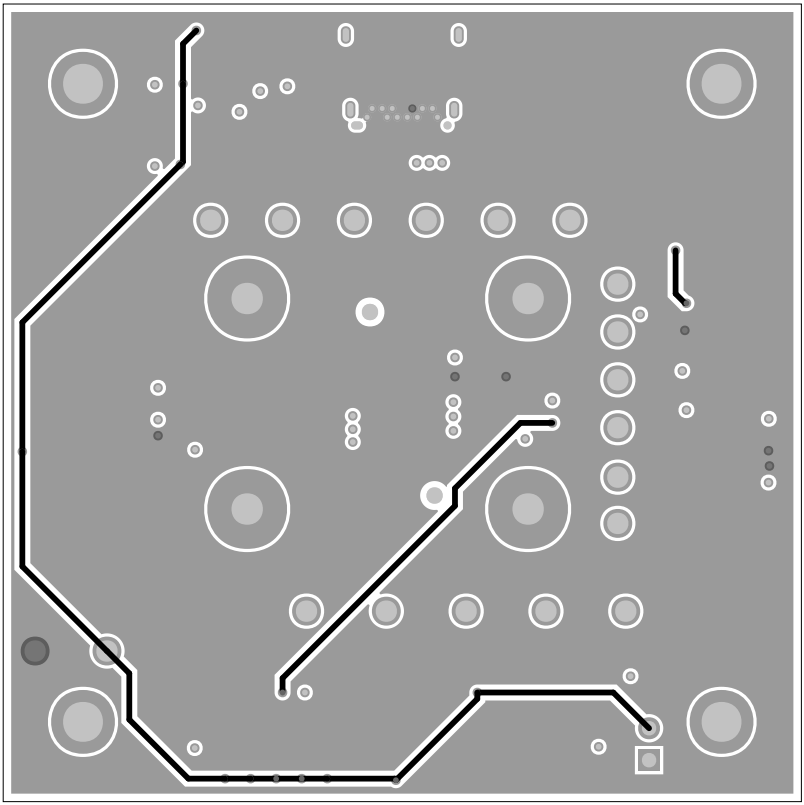



LAYER 2

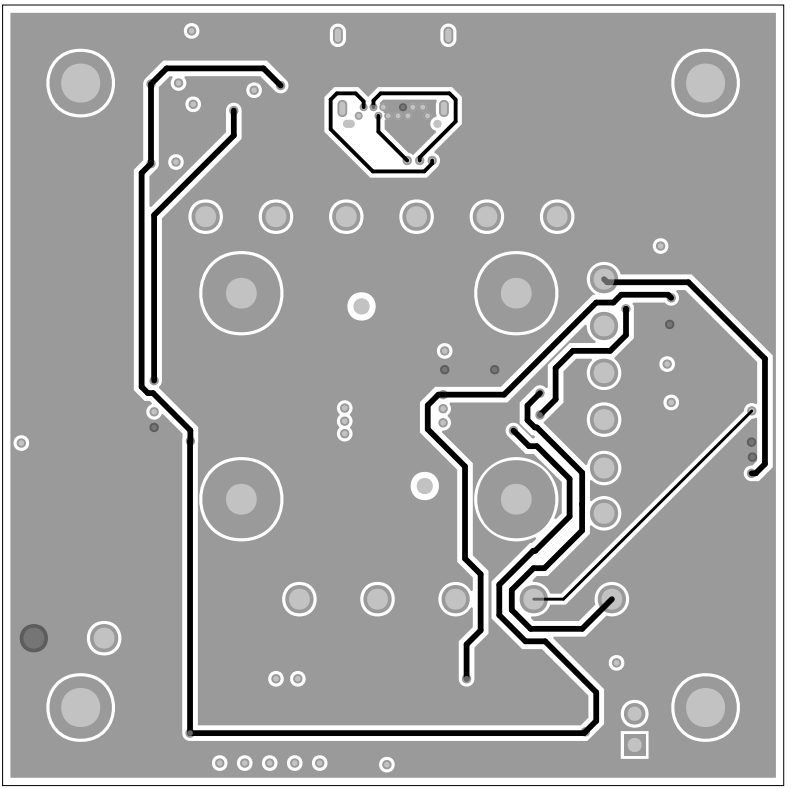

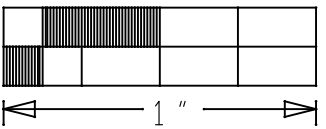

LAYER 3

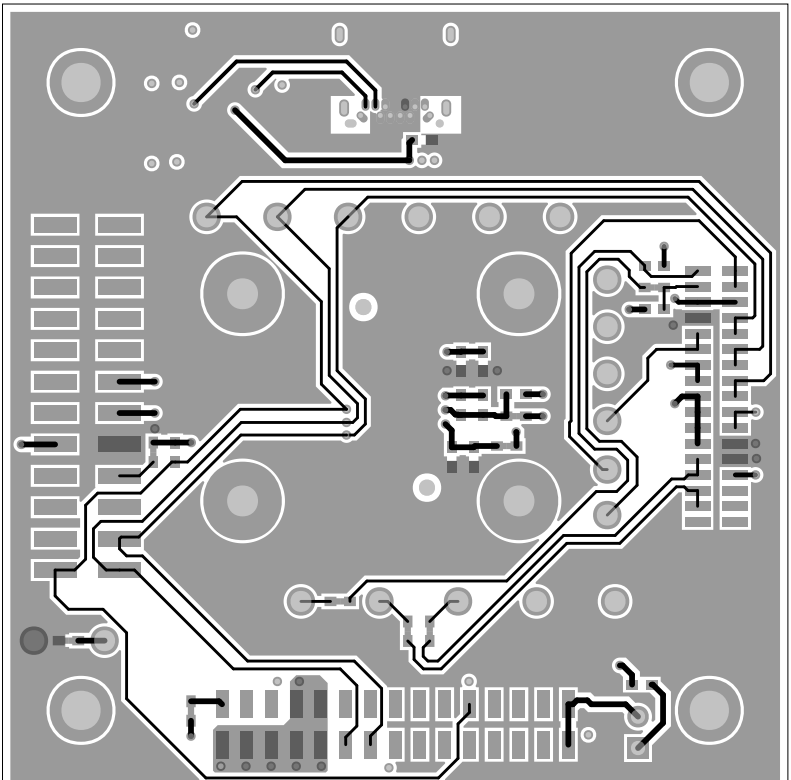



BOTTOM

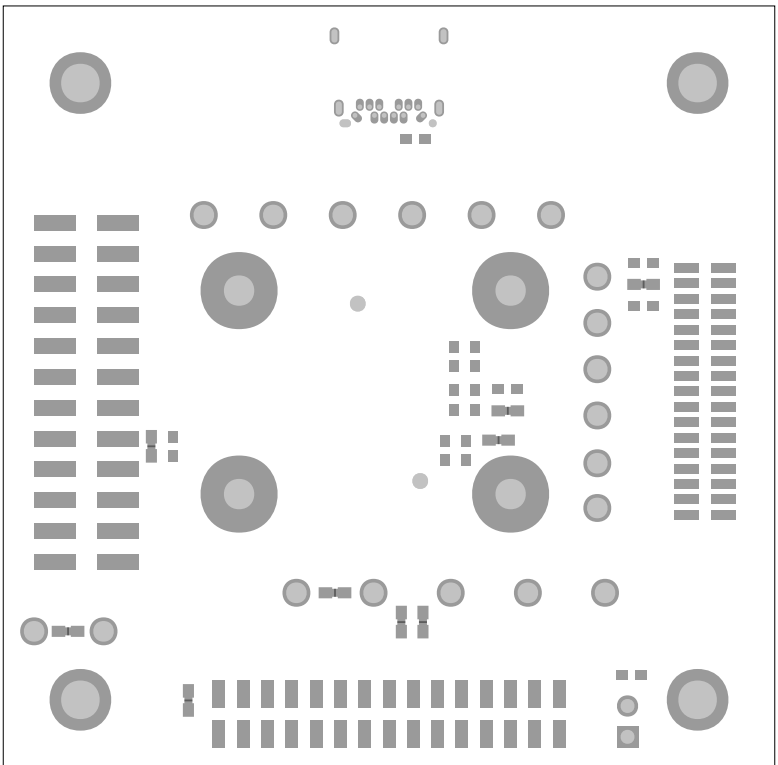



BOTTOM MASK

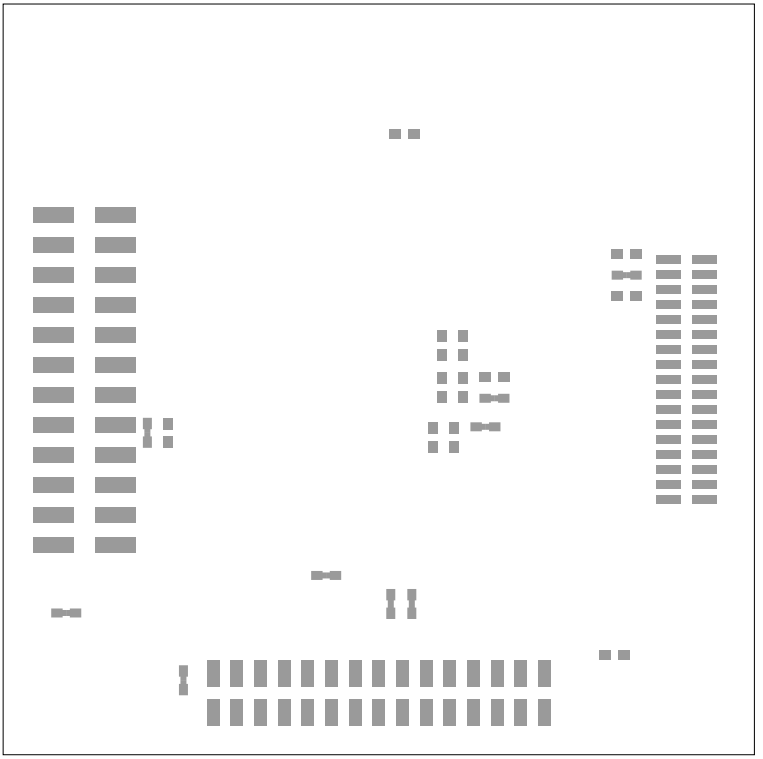

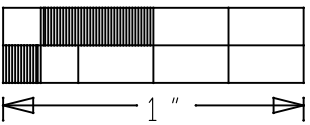

BOTTOM PASTE

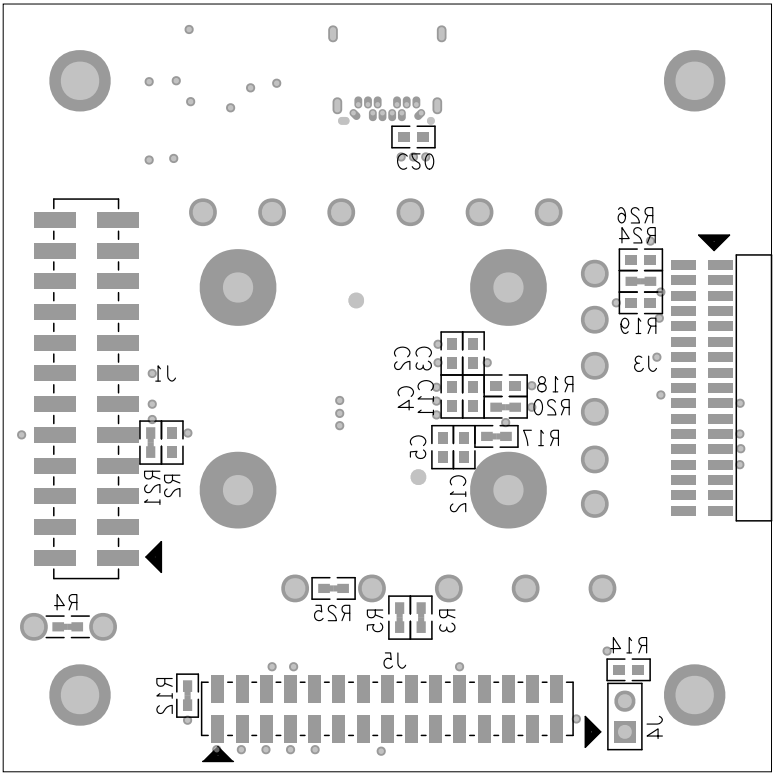

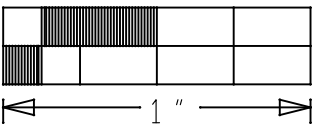

BOTTOM SILKSCREEN

MAX86160

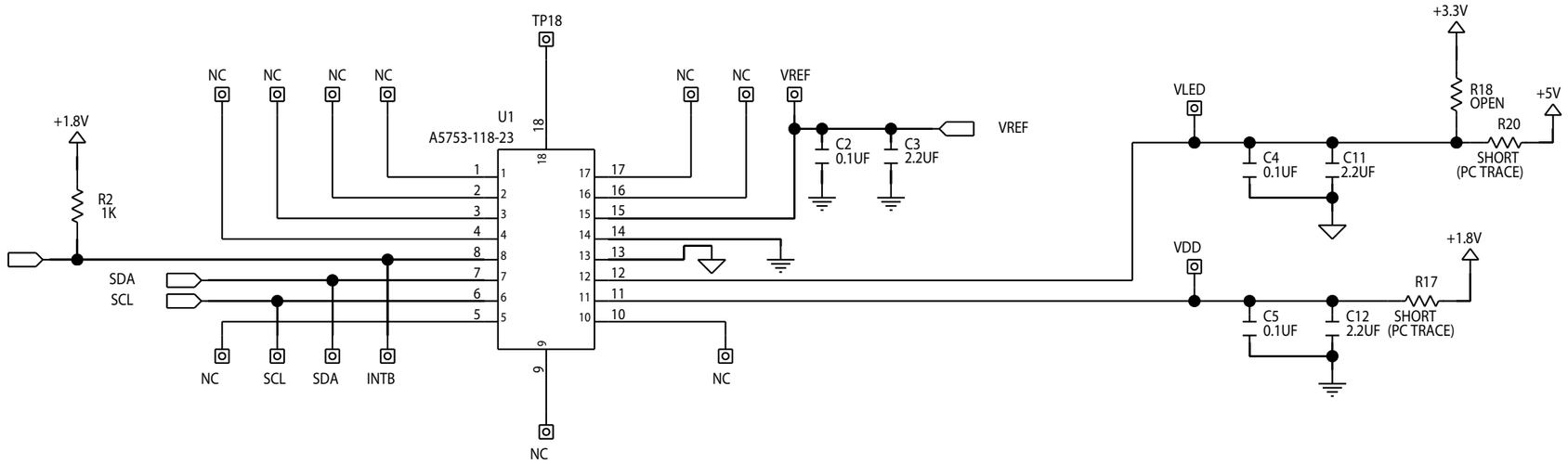

I2C BUFFER

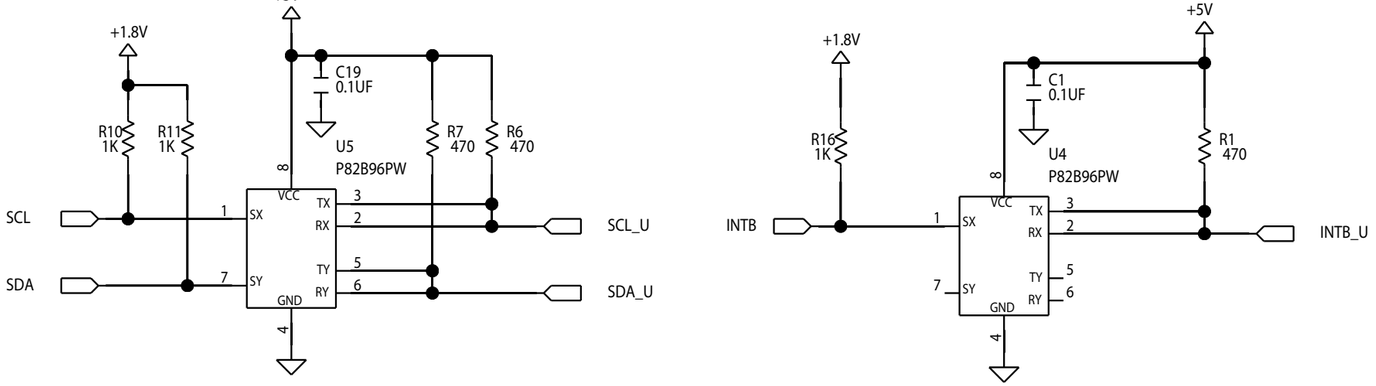

VOLTAGE REGULATORS

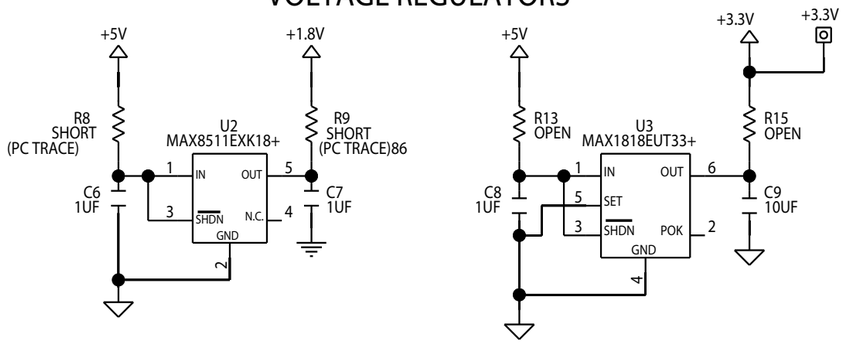

I2C USB

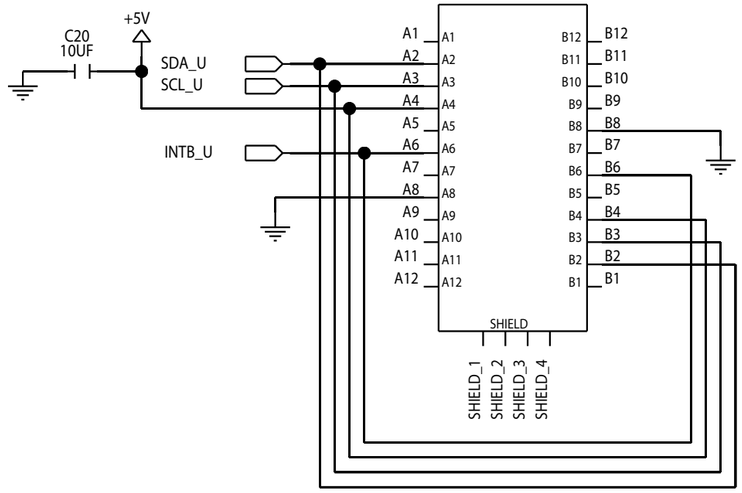

CONNECTOR 1

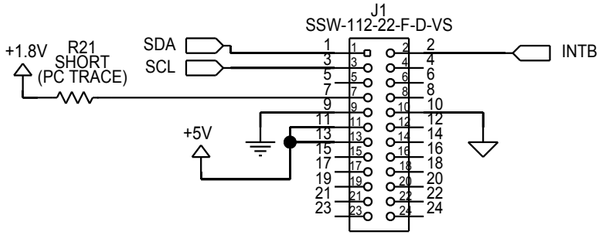

CONNECTOR 2

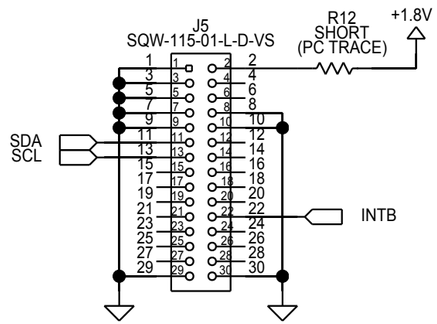

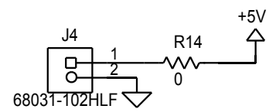

CONNECTOR 3

